CAD FILE:

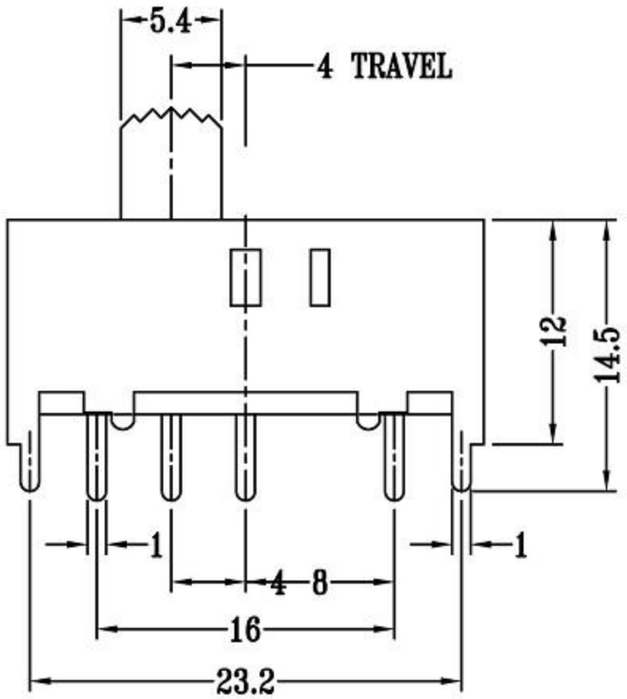

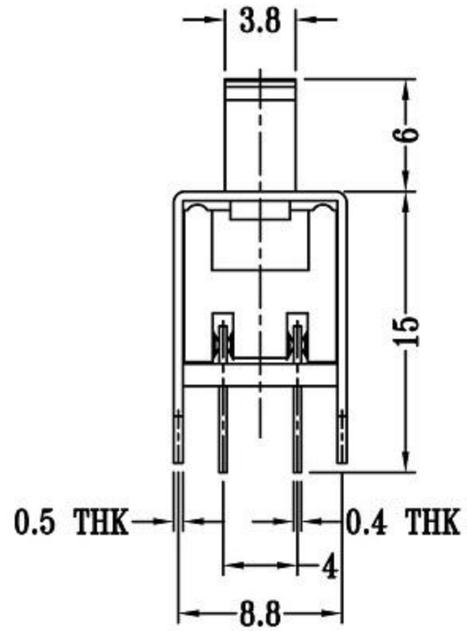

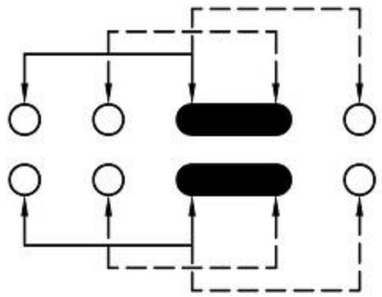

SCHEMATIC (SHORTING)

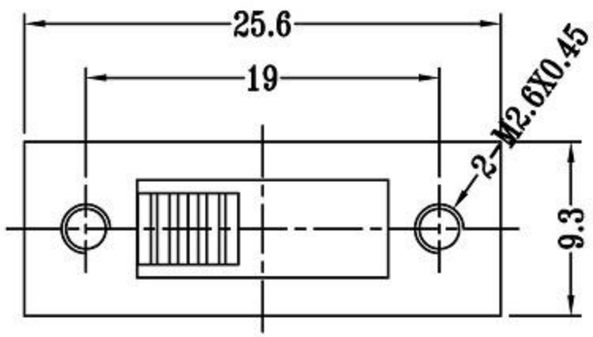

注:"*"表示关键尺寸(6个)

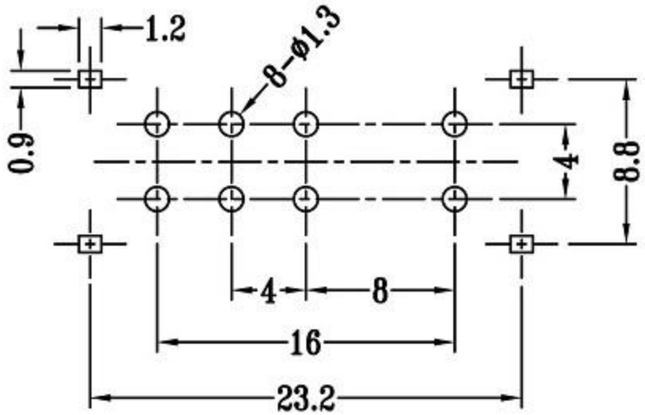

P.C.B LAYOUT
BOTTOM VIEW

拨动开关立式技术参数:

1. 额定负荷: DC 30V 50V 0.3A 0.5A
2. 接触阻抗: ≤50mΩ
3. 绝缘阻抗: ≥100mΩ DC500V
4. 耐焊温度: 250±5° 5s
5. 使用寿命: 10,000 cycles
6. 使用温度: -25 ℃ to 80 ℃
7. 使用湿度: ≤85% RH
8. 操作力 : 160gf 256gf 300gf 可定制
9. 手柄长度:2mm-10mm 可定制

NO.	PARTS	MATERIALS	Q'TY	FINISH
8				
7	STEEL BALL	STEEL	1	NATURAL
6	SPRING	STEEL WIRE	1	NATURAL
5	CONTACT CLIP	PBS STRIP	2	Ag PLATED
4	TERMINAL	BRASS STRIP	8	Ag PLATED
3	BASE	PHENOLIC RESIN	1	NATURAL
2	FRAME	STEEL STRIP	1	Ni PLATED
1	KNOB	POM	1	BLACK

TOLERANCE UNLESS SPECIFIED			
WITHIN	A	2012-10-26	初 版
OVER	ISSUE	DATE	DESCRIPTIONS OF REVISION / APPD.
TITLE : VERTICAL SLIDE SWITCH	UNIT : mm	DRWG NO.:	
MODEL:	SCALE: 3:1	DWN.	2012-10-26
东莞市高迪电子有限公司		CHK'D / APPD.	2012-10-26